RHEA
LED LINEAR
Infinite Architectural Linear Lighting Solutions

RHEA
LED LINEAR
Infinite Architectural Linear Lighting Solutions

SMART LINEAR LIGHTING SYSTEM 2.0

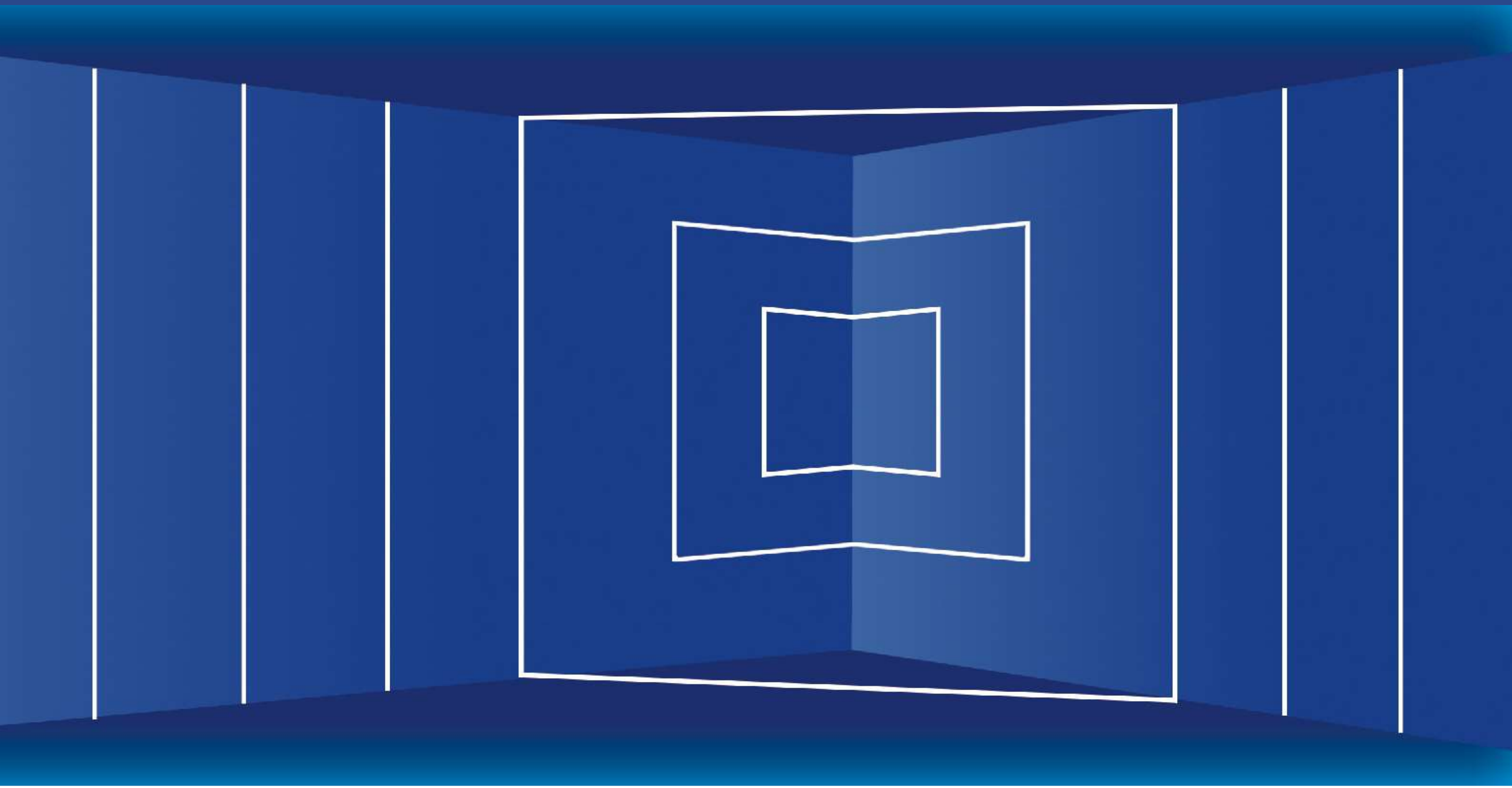

www.rhealedlinear.com

RHEA
LED LINEAR
Infinite Architectural Linear Lighting Solutions

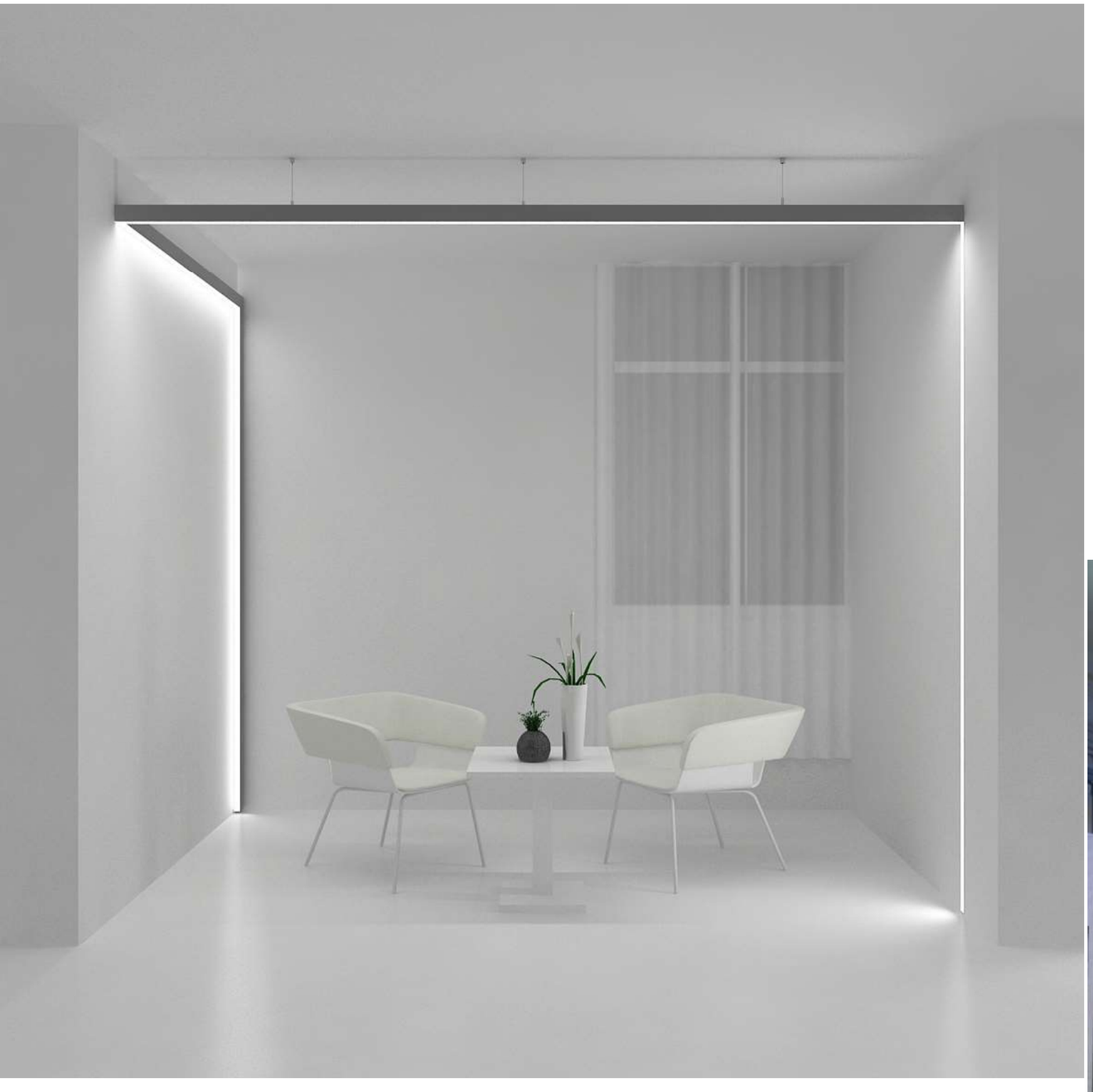

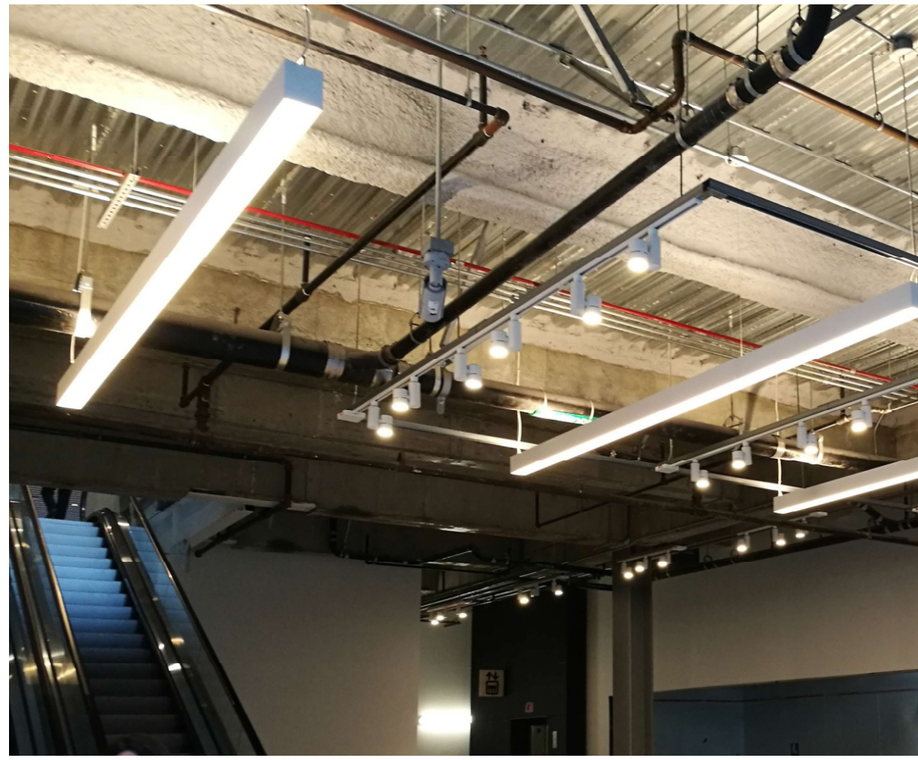

RHEA
LED LINEAR
Infinite Architectural Linear Lighting Solutions

RHEA
LED LINEAR
Infinite Architectural Linear Lighting Solutions

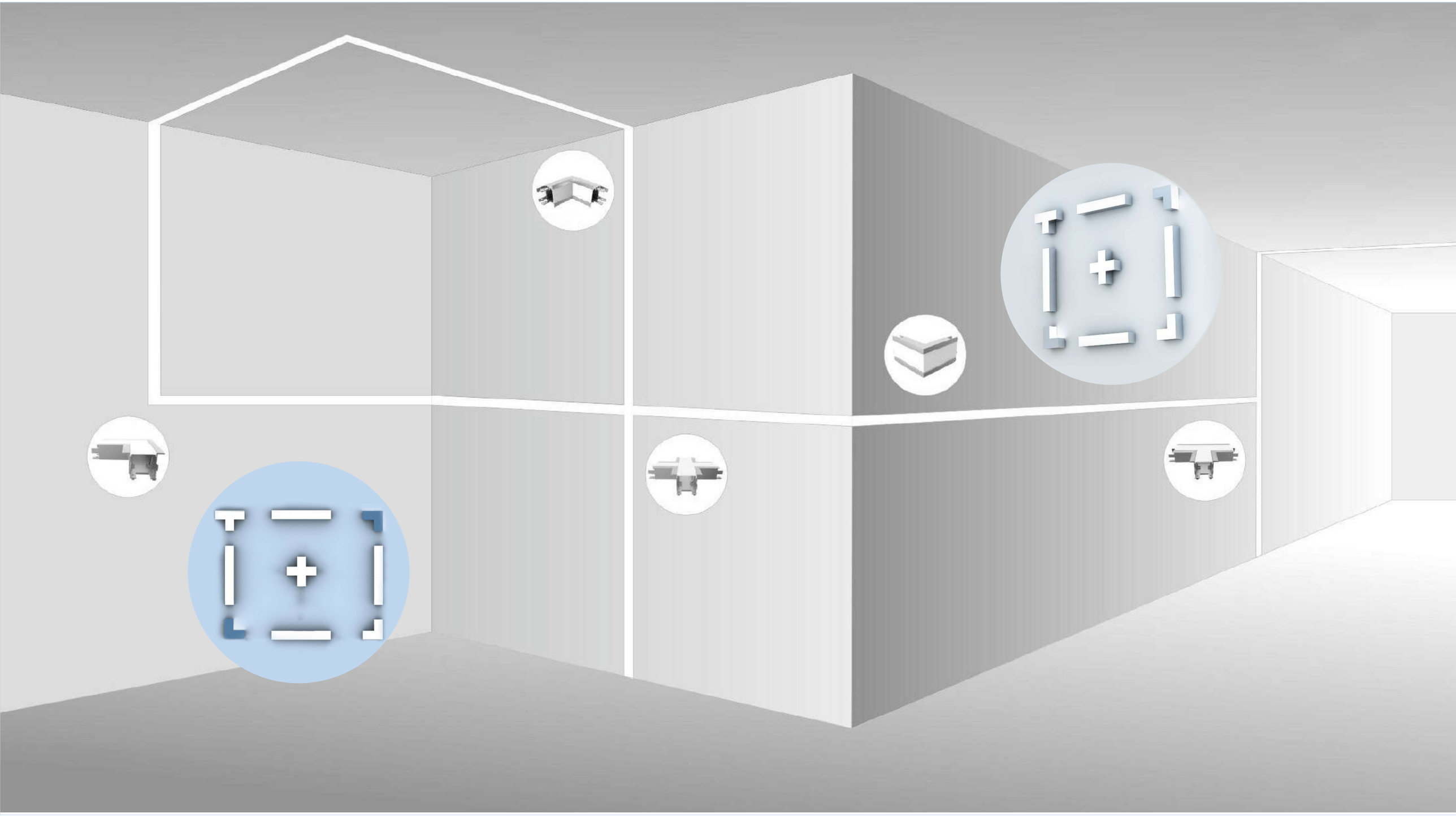

www.rhealedlinear.com

RHEA
LED LINEAR
Infinite Architectural Linear Lighting Solutions

RHEA
LED LINEAR
Infinite Architectural Linear Lighting Solutions

SMART LINEAR LIGHTING SYSTEM 2.0

Smart linear lighting system, A linear lighting system based on Intelligent control scheme.

SLLS 2.0 The system not only covers the design of freedom, simplicity, fashionable, Also contains the intelligent control for building lighting environment and the lighting environment design of art.

At the same time, the system is divided into two series which is Linear lighting system and Arc lighting system.

Free Line series : Can creating a sense of time, sense of space. Free Arc series: Can creating a sense of soft feeling, a sense of freedom. They can strengthening the interior light environment atmosphere .

The Birth of SLLS 2.0, designed to bring comfortable, bright and artistic charm to the world .

RHEA
LED LINEAR
Infinite Architectural Linear Lighting Solutions

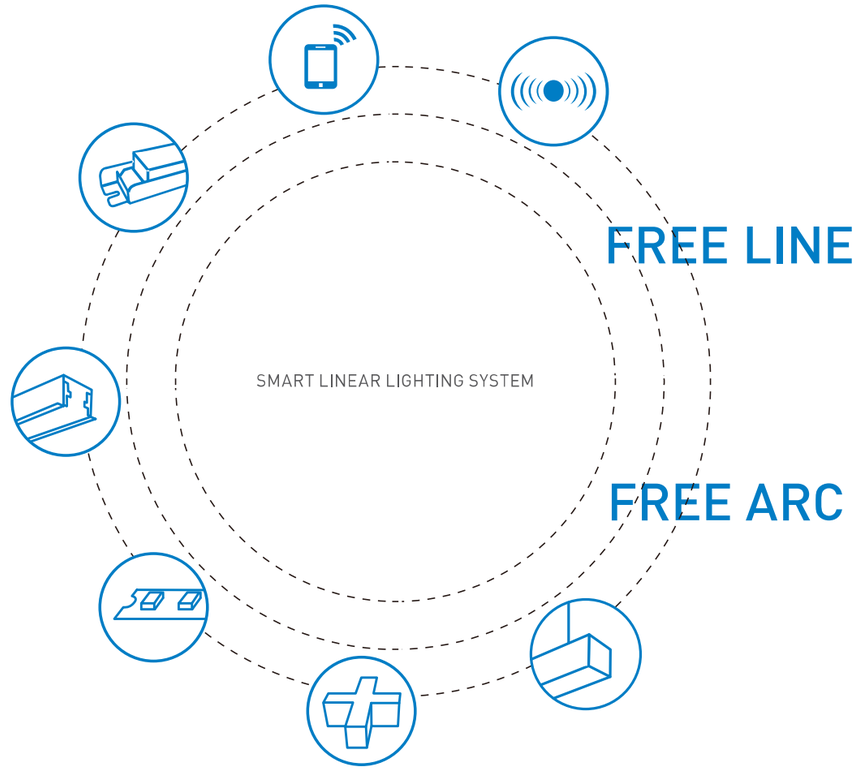

www.rhealedlinear.com

RHEA
LED LINEAR
Infinite Architectural Linear Lighting Solutions

SMART LINEAR LIGHTING SYSTEM 2.0

RHEALS5186S

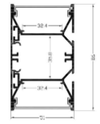

RHEALS6884S

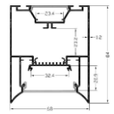

RHEALS15032S

RHEALS17032S

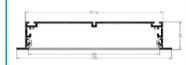

RHEALS5390A

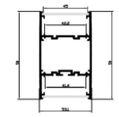

RHEALP8085S

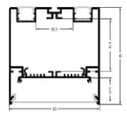

RHEALS6236S-II

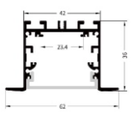

RHEALS6260S

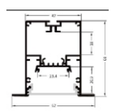

RHEALS3235A-II

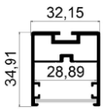

RHEALS6070A-II

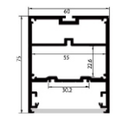

RHEALS3916R

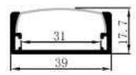

RHEALS5270S

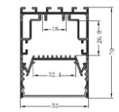

RHEALS7578S

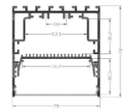

RHEALS7236S

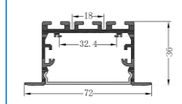

RHEALS9636S

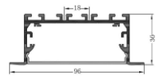

SMART LINEAR LIGHTING SYSTEM

SMART

① Internal / external dimming driver

② Constant voltage / constant current

③ 0/1-10V、DALI、Push-Dim、IR Control dimming、Smart sensor

④ Bluetooth, Wireless access control, installation without add new wires

⑤ Building overall/partition dimming, luminous environment intelligent control

LINEAR

① End cap easy installation without screws

② Light leakage proof

③ Modular assembly design

④ Integrated dimmer installation

⑤ Convenient and efficient installation experience

⑥ Smart seamless connector

www.rhealedlinear.com

SMART LINEAR LIGHTING SYSTEM

LIGHTING

① PCB/FPC two types of models can be selected

② Constant current can be spliced

③ Constant voltage can be cutting

④ Efficiency> 120 lm/W

⑤ SDCM < 3

⑥ Ra>80、Ra>90 (R9>0)

Constant voltage

Constant current

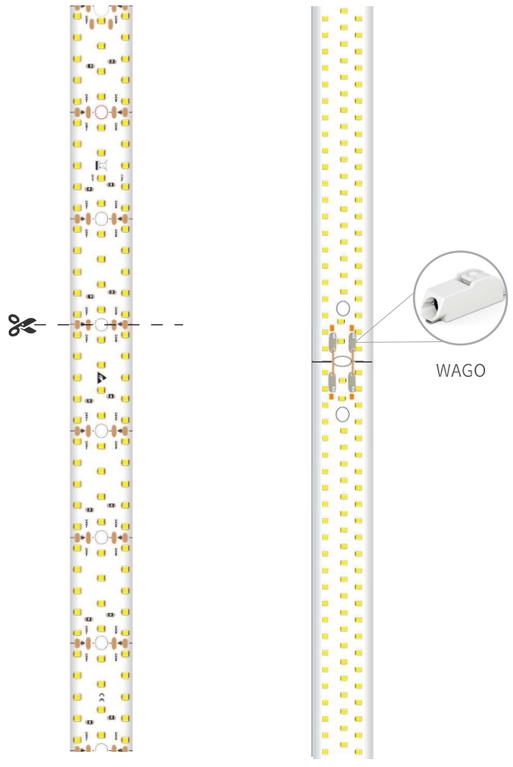

SYSTEM

① Multi-corner connector

② Flexible selling mode

③ 0/1-10 V, DALI, Push - Dim, IR Control dimming、smart sensor

④ Wireless access control, installation without add new wires

⑤ Building overall/partition dimming, luminous environment intelligent control

⑥ Smart seamless connector

Sales pattern of individual

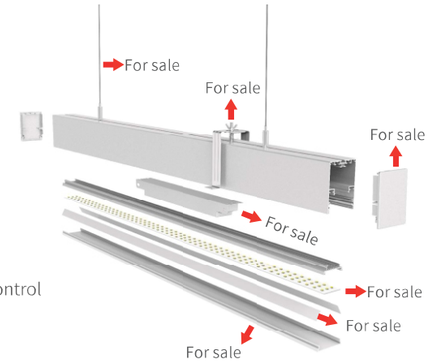

Sales pattern of finished luminaire

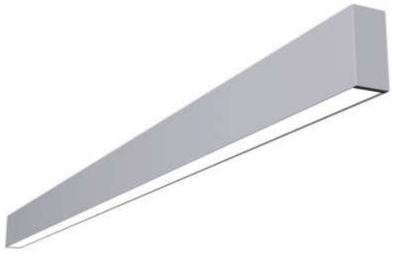

www.rhealedlinear.com

PRODUCT NAMING RULES

LS-XXXX-X-X

LS　Smart Linear Lighting System

XXXX　Size

3560: wide 35mm,high 60mm

X　Profile shape

S: Straight　A: Arc

X　Second generation

ps: LS3560S- II

Smart Linear Lighting System; wide 35mm * high 60mm; Straight ; Second generation

RHEA
LED LINEAR
Infinite Architectural Linear Lighting Solutions

ICON DESCRIPTION

Pendant

Surface mounted

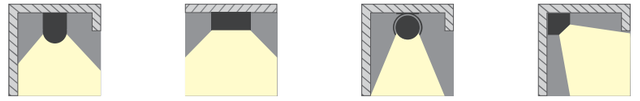

Wall mounted

Recessed

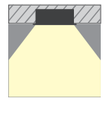

FREE LINE

COSMO COLIN

www.rhealedlinear.com

RHEA
LED LINEAR
Infinite Architectural Linear Lighting Solutions

www.rhealedlinear.com

RHEA
LED LINEAR
Infinite Architectural Linear Lighting Solutions

JUTO
RHEALS5186S

Silver Black White (ral9016)

Material:	AL6063-T5
Surface:	Anodized/ Painting
Cover:	Diffuser /Transparent /Opal
Power:	40 W/m
Lamp beads:	240LEDs/m (2835)
Lighting source width:	32 mm
Available lengths:	0.5-3M
Application:	Commercial lighting /Office lighting

Unit: mm

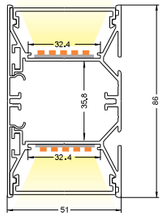

Match with(1.0/1.2/1.5/1.8/2.0/2.5/3.0m) length of luminaire

NJG-32X500X1 12C10B

PCB-Constant current
Power: 40W/m
Width: 0.032m
length：0.49m/pcs

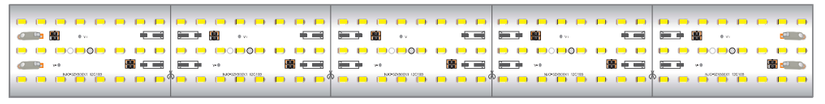

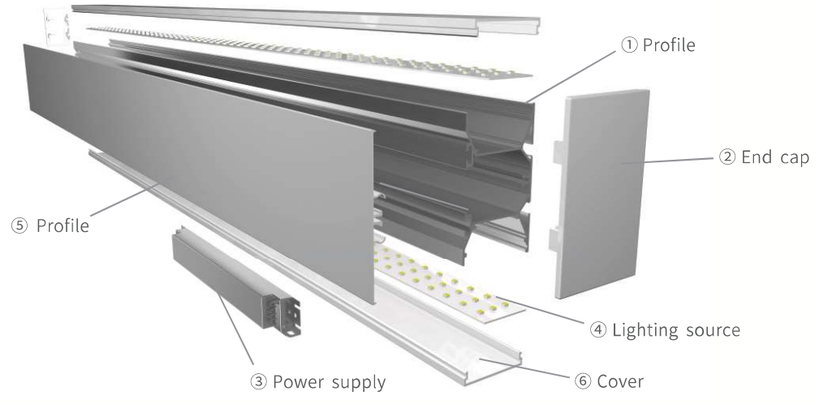

www.rhealedlinear.com

RHEA
LED LINEAR
Infinite Architectural Linear Lighting Solutions

RUTO
RHEALS6884S

Silver Black White (ral9016)

Material:	AL6063-T5
Surface:	Anodized/ Painting
Cover:	Diffuser /Transparent /Opal
Power:	40 W/m
Lamp beads:	240LEDs/m (2835)
Lighting source width:	32 mm
Available lengths:	0.5-3M
Application:	Commercial lighting /Office lighting

Unit: mm

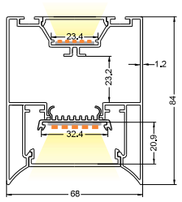

Match with(1.0/1.2/1.5/1.8/2.0/2.5/3.0m) length of luminaire

NJG-32X500X1 12C10B

PCB-Constant current
Power: 40W/m
Width: 0.032m
length: 0.49m/pcs

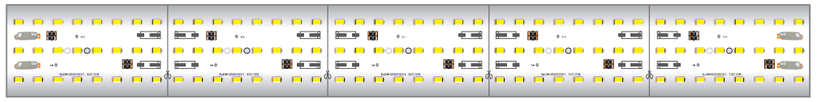

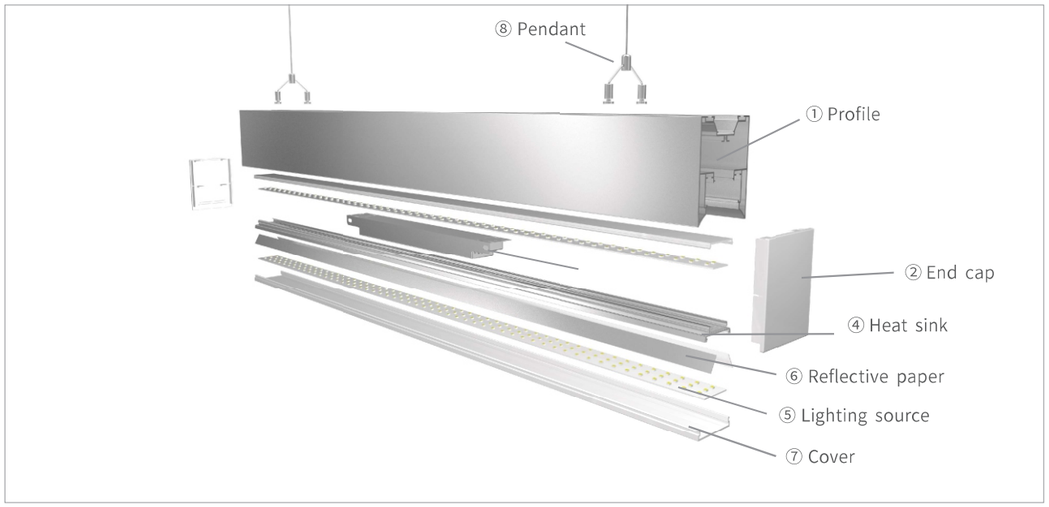

RHEA
LED LINEAR
Infinite Architectural Linear Lighting Solutions

YOTO
RHEALS15032S

Silver Black White (ral9016)

Material:	AL6063-T5
Surface:	Anodized/ Painting
Cover:	Diffuser /Transparent /Opal
Power:	40 W/m
Lamp beads:	210LEDs/m (2835)
Lighting source width:	50 mm
Available lengths:	0.5-3M
Application:	Commercial lighting /Office lighting

Unit: mm

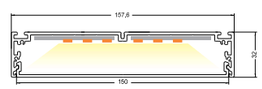

Match with(1.0/1.2/1.5/1.8/2.0/2.5/3.0m) length of luminaire

NJG-V8420-50

FPC-Constant voltage
Power: 40 W/m
Width: 0.05m
length: 2.5m/reel

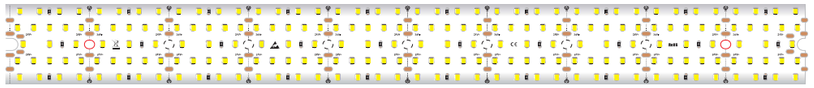

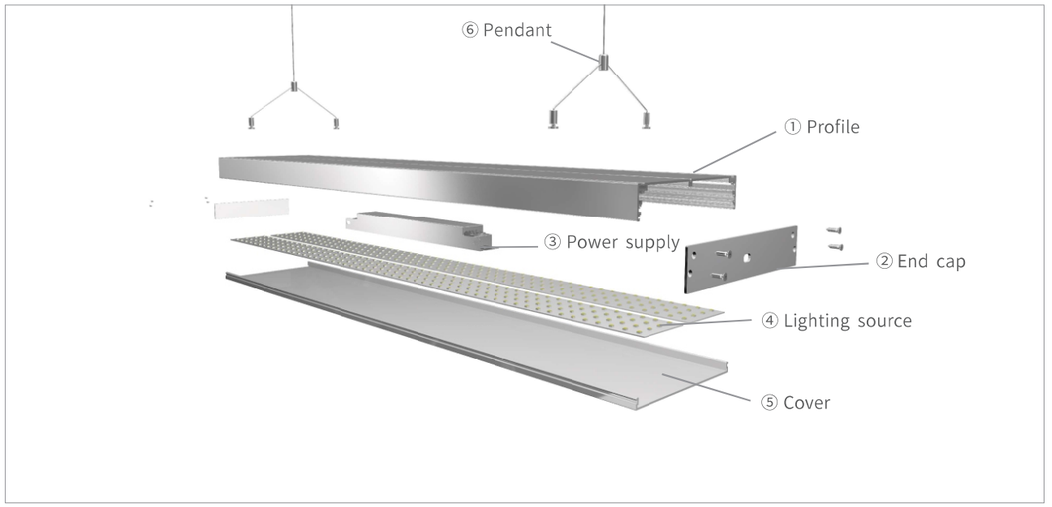

RHEA
LED LINEAR
Infinite Architectural Linear Lighting Solutions

FITO
RHEALS4265S

Silver Black White (ral9016)

Material:	AL6063-T5
Surface:	Anodized/ Painting
Cover:	Diffuser /Transparent /Opal
Power:	25 W/m
Lamp beads:	144LEDs/m (2835)
Lighting source width:	23 mm
Available lengths:	0.5-3M
Application:	Commercial lighting /Office lighting

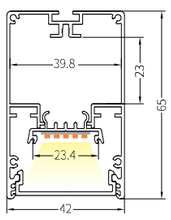

Unit: mm

Mat ch with (1.0/1.2/1.5/1.8/2.0/2.5/3.0m) length of luminair e

NJG-23X500X1 12C6B

PCB-Constant current
Power: 25 W/m
Width: 0.023m
length: 0.49m/pcs

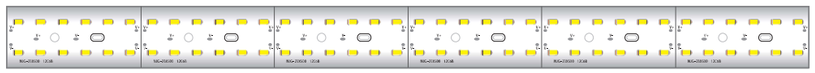

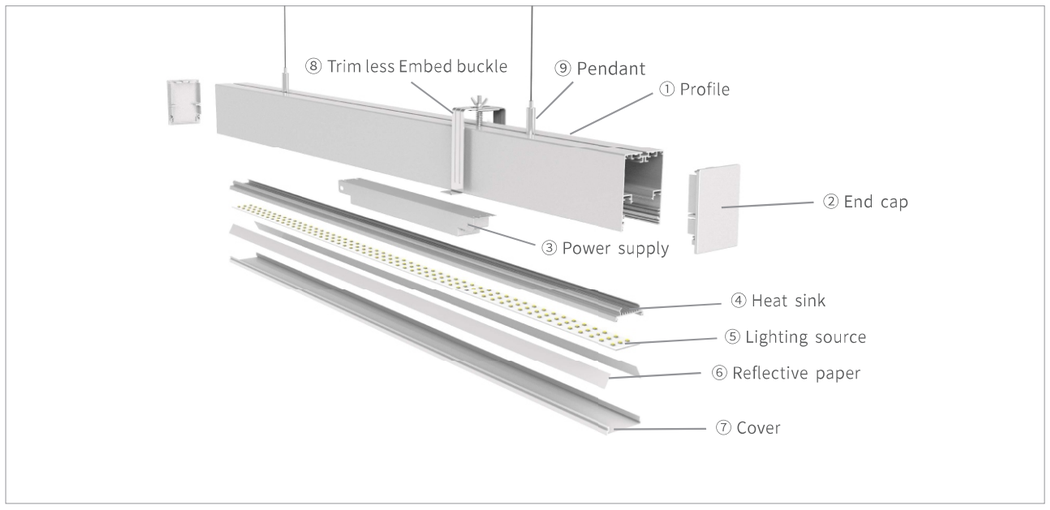

RHEA
LED LINEAR
Infinite Architectural Linear Lighting Solutions

BATO
RHEALS5270S

Silver Black White (ral9016)

Material:	AL6063-T5
Surface:	Anodized/ Painting
Cover:	Diffuser /Transparent /Opal
Power:	28 W/m
Lamp beads:	243LEDs/m (2835)
Lighting source width:	32 mm
Available lengths:	0.5-2.5M
Application:	Commercial lighting /Office lighting

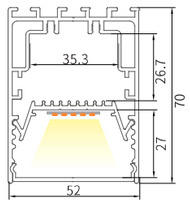

Unit: mm

Match with (0.6/1.2/1.8/2.4/3.0m) length of luminaire

NJG-V8280-32A

PCB-Constant voltage
Power: 28 W/m
Width: 32mm
length : 299mm/pcs

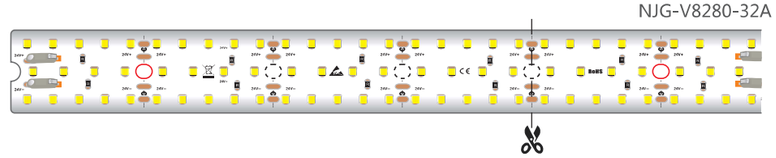

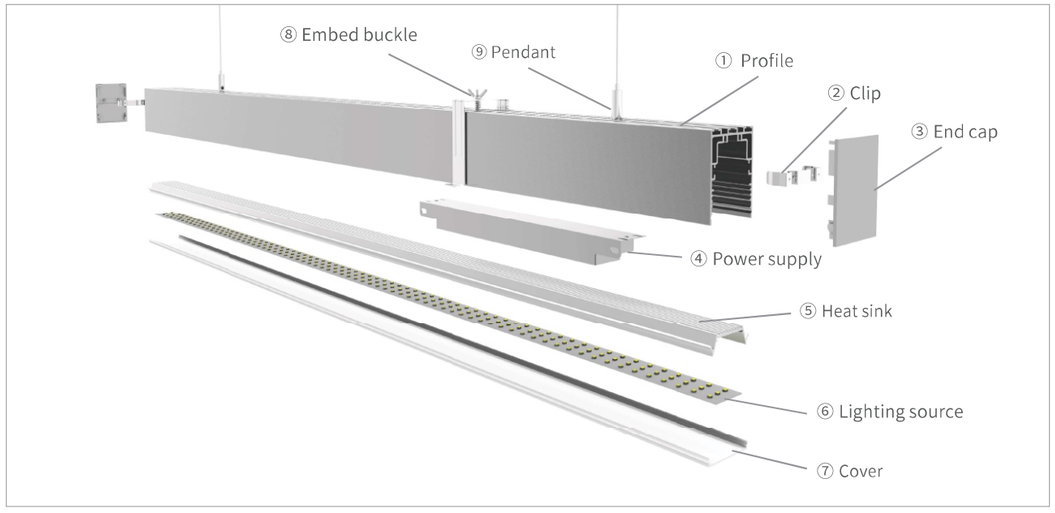

RHEA
LED LINEAR
Infinite Architectural Linear Lighting Solutions

BATO
RHEALS5270S-II

IP20

Silver Black White (ral9016)

Material:	AL6063-T5
Surface:	Anodized/ Painting
Cover:	Diffuser /Transparent /Opal
Power:	28 W/m
Lamp beads:	243LEDs/m (2835)
Lighting source width:	32 mm
Available lengths:	0.5-3M
Application:	Commercial lighting /Office lighting

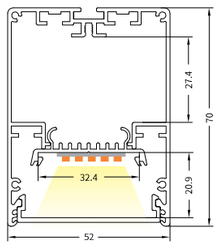

Unit: mm

Match with (1.0/1.2/1.5/1.8/2.0/2.5/3.0m) length of luminaire
NJG-32X500X1 12C10B

PCB-Constant current
Power: 40 W/m
Width: 0.032m
length: 0.49m/pcs

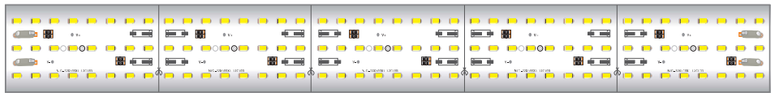

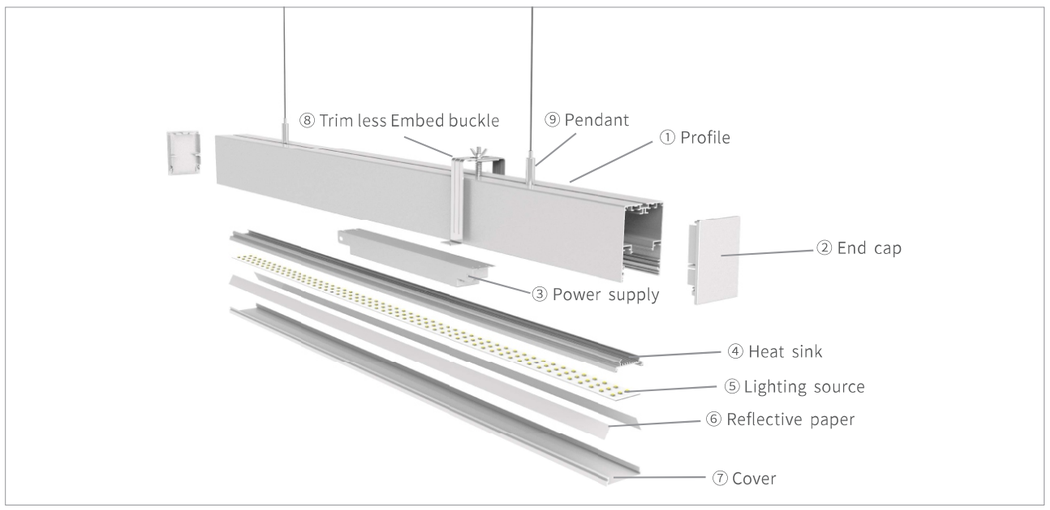

RHEA
LED LINEAR
Infinite Architectural Linear Lighting Solutions

DATO
RHEALP8085S

IP20

Silver Black White (ral9016)

Material:	AL6063-T5
Surface:	Anodized/ Painting
Cover:	Diffuser /Transparent /Opal
Power:	60 W/m
Lamp beads:	500LEDs/m (2835)
Lighting source width:	60 mm
Available lengths:	0.5-3M
Application:	Commercial lighting /Office lighting

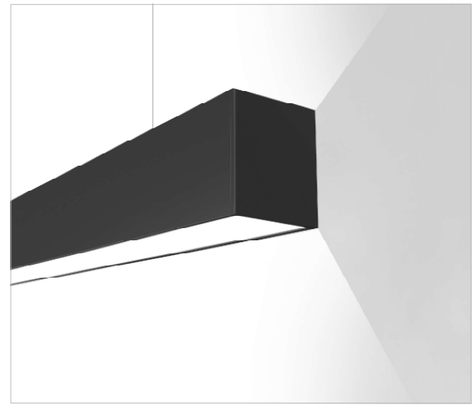

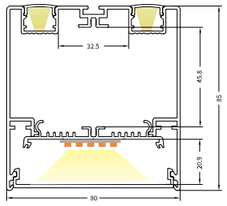

Unit: mm

Match with (1.0/1.2/1.5/1.8/2.0/2.5/3.0m) length of luminaire
NJG-60X500 12C20B

PCB-Constant current
Power: 60 W/m
Width: 0.06m
length: 0.49m/pcs

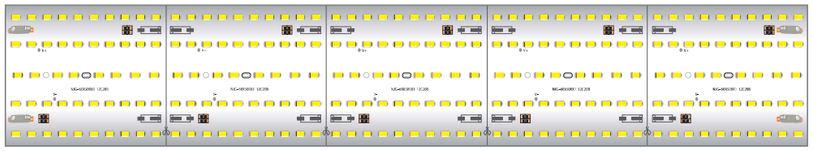

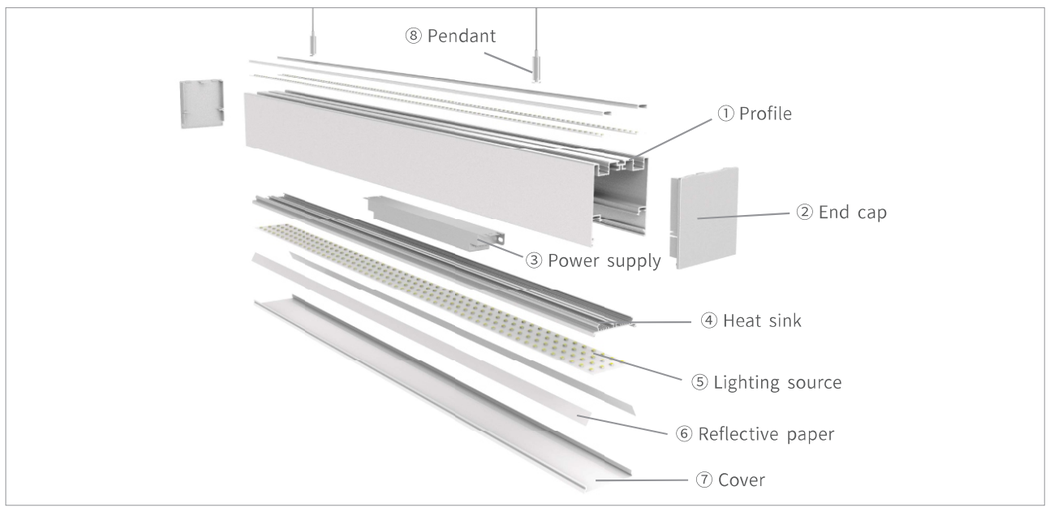

RHEA
LED LINEAR
Infinite Architectural Linear Lighting Solutions

MATO
RHEALS7578S

Silver Black White (ral9016)

Material:	AL6063-T5
Surface:	Anodized/ Painting
Cover:	Diffuser /Transparent /Opal
Power:	40 W/m
Lamp beads:	210LEDs/m (2835)
Lighting source width:	58 mm
Available lengths:	0.5-2.5M
Application:	Commercial lighting /Office lighting

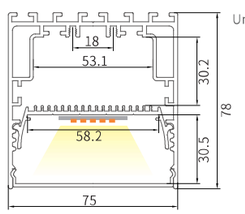

Unit: mm

Match with (0.6/1.2/1.8/2.4/3.0m) length of luminaire
NJG-V8420-58A

PCB-Constant voltage
Power: 40 W/m
Width: 58mm
length : 299mm/pcs

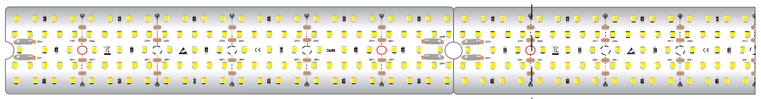

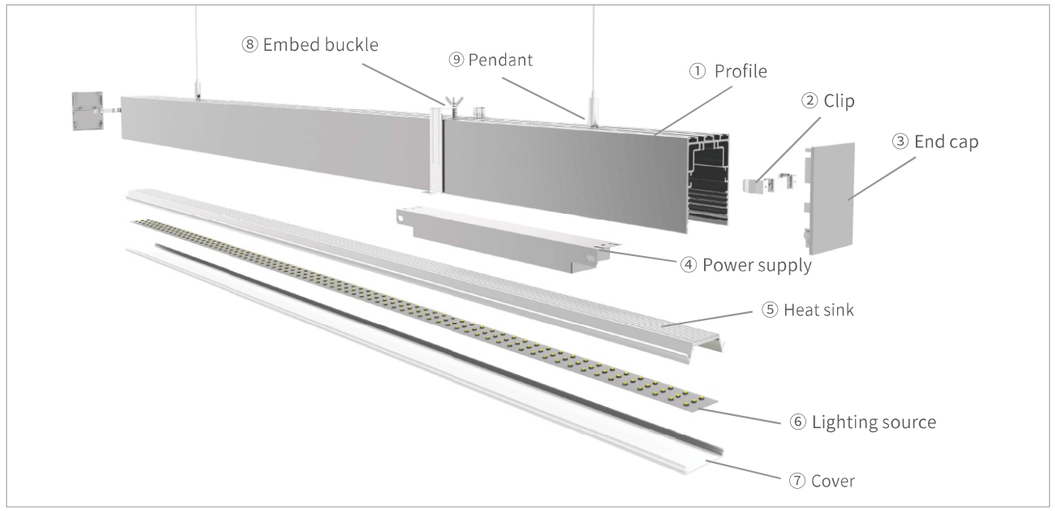

RHEA
LED LINEAR
Infinite Architectural Linear Lighting Solutions

MATO
RHEALS7578S-II

Silver Black White (ral9016)

Material:	AL6063-T5
Surface:	Anodized/ Painting
Cover:	Diffuser /Transparent /Opal
Power:	60 W/m
Lamp beads:	360LEDs/m (2835)
Lighting source width:	55 mm
Available lengths:	0.5-3M
Application:	Commercial lighting /Office lighting

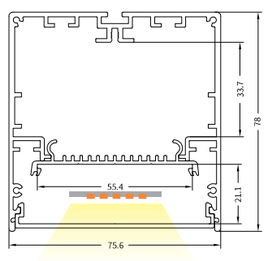

Unit: mm

Match with (1.0/1.2/1.5/1.8/2.0/2.5/3.0m) length of luminair e
NJG-55X500 12C15B

PCB-Constant current
Power: 60 W/m
Width: 0.055m
length: 0.49m/pcs

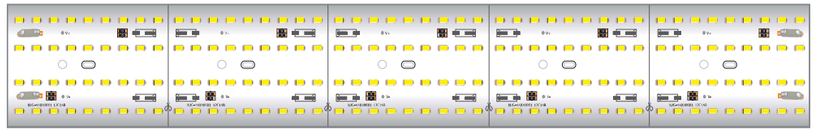

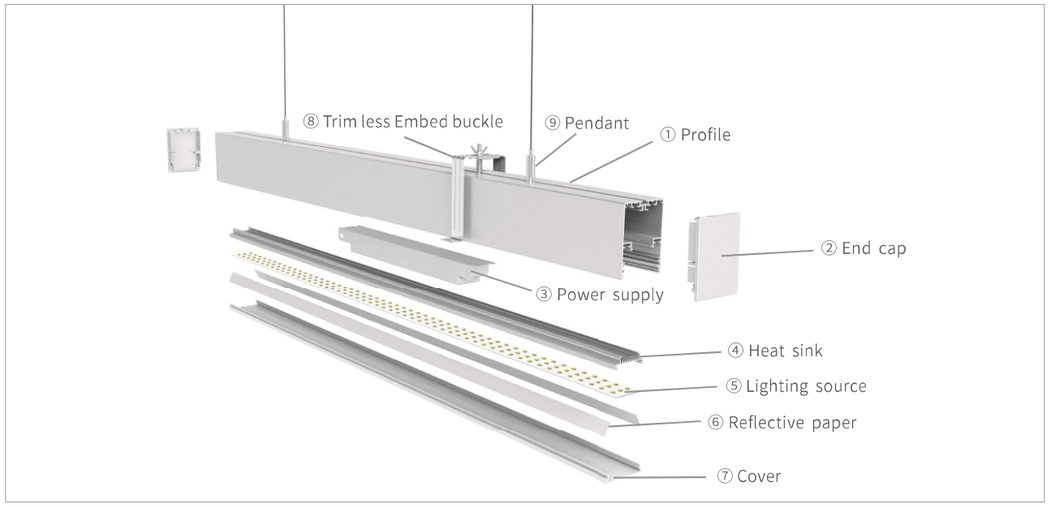

RHEA
LED LINEAR
Infinite Architectural Linear Lighting Solutions

SOTO
RHEALS17032S

Silver Black White (ral9016)

Material:	AL6063-T5
Surface:	Anodized/ Painting
Cover:	Diffuser /Transparent /Opal
Power:	40 W/m
Lamp beads:	210LEDs/m (2835)
Lighting source width:	50 mm
Available lengths:	0.5-3M
Application:	Commercial lighting /Office lighting

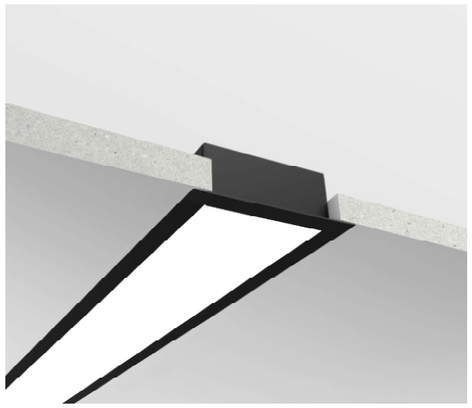

Unit: mm

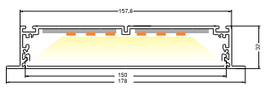

Match with(1.0/1.2/1.5/1.8/2.0/2.5/3.0m) length of luminaire

NJG-V8420-50

FPC-Constant voltage
Power: 40 W/m
Width: 0.05m
length：2.5m/reel

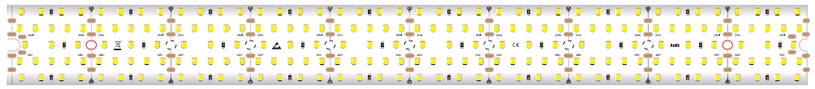

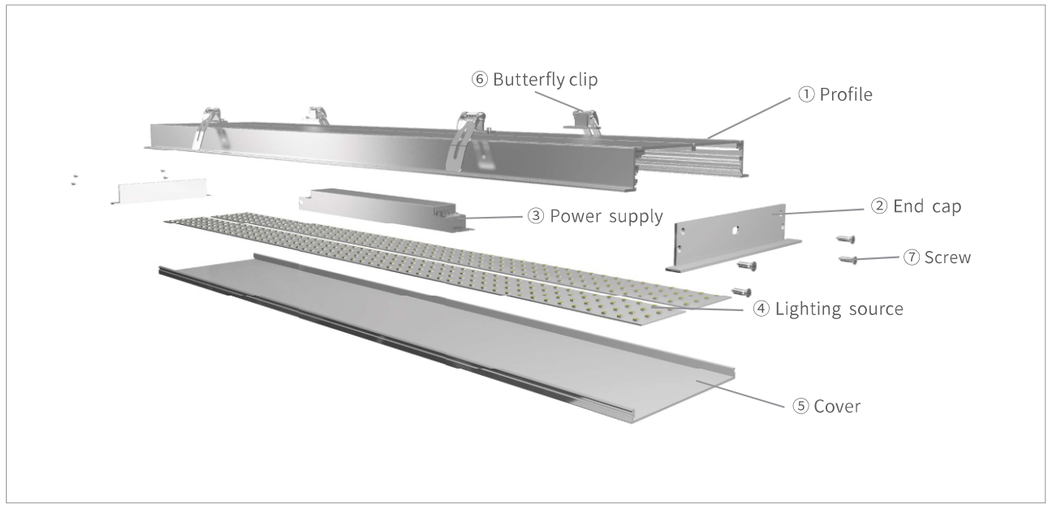

RHEA
LED LINEAR
Infinite Architectural Linear Lighting Solutions

SURO
RHEALS6236S-II

Silver Black White (ral9016)

Material:	AL6063-T5
Surface:	Anodized/ Painting
Cover:	Diffuser /Transparent /Opal
Power:	25 W/m
Lamp beads:	140LEDs/m (2835)
Lighting source width:	23 mm
Available lengths:	0.5-3M
Application:	Commercial lighting /Office lighting

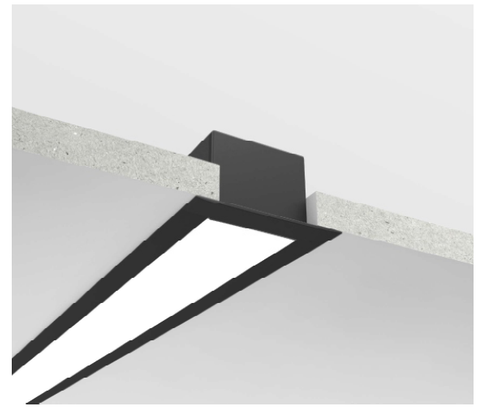

Unit: mm

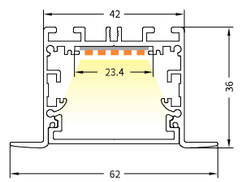

Match with（1.0/1.2/1.5/1.8/2.0/2.5/3.0m) length of luminaire

NJG-23X500X1 12C6B

PCB-Constant current
Power: 25 W/m
Width: 0.023m
length：0.49m/pcs

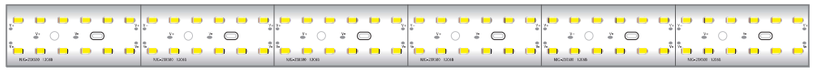

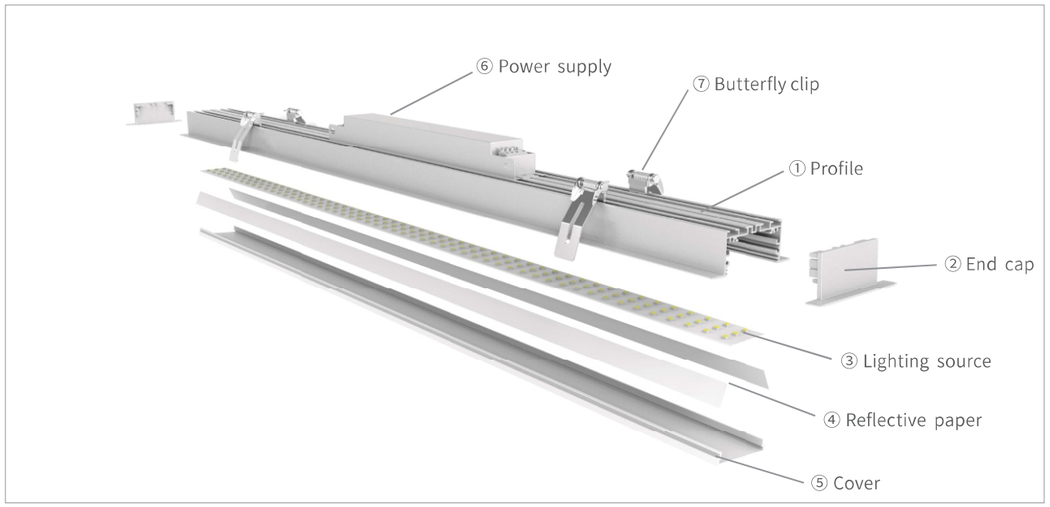

RHEA
LED LINEAR
Infinite Architectural Linear Lighting Solutions

AIRO
RHEALS6260S

Silver Black White (ral9016)

Material:	AL6063-T5
Surface:	Anodized/ Painting
Cover:	Diffuser /Transparent /Opal
Power:	25 W/m
Lamp beads:	140LEDs/m (2835)
Lighting source width:	23 mm
Available lengths:	0.5-3M
Application:	Commercial lighting /Office lighting

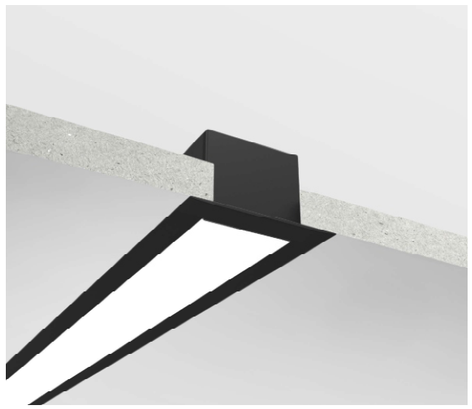

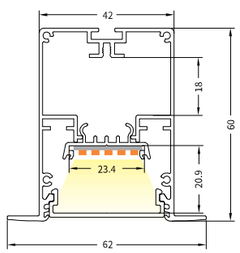

Unit: mm

Match with（1.0/1.2/1.5/1.8/2.0/2.5/3.0m) length of luminair e
NJG-23X500X1 12C6B

PCB-Constant current
Power: 25 W/m
Width: 0.023m
length: 0.49m/pcs

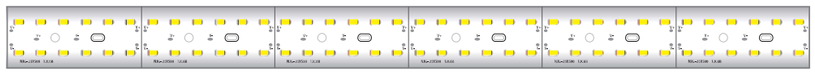

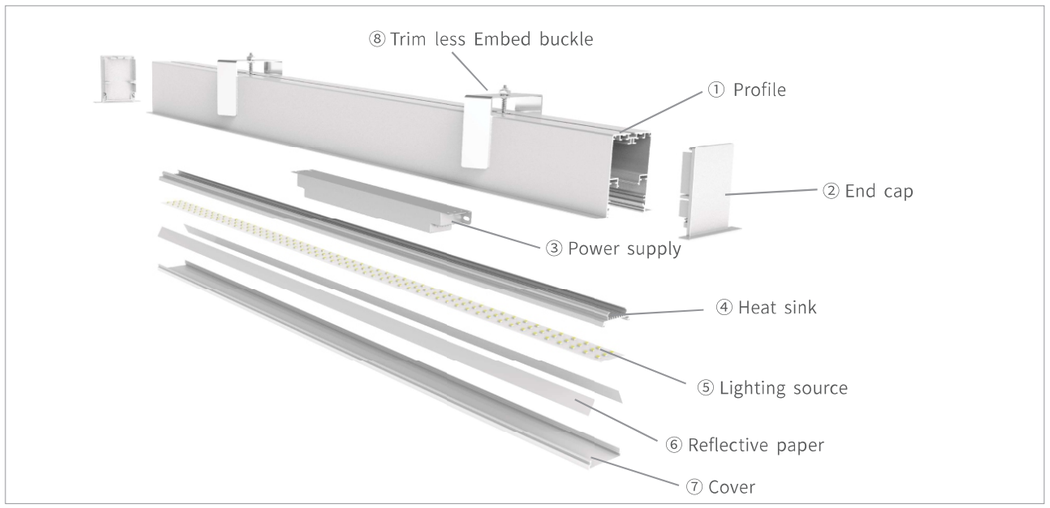

RHEA
LED LINEAR
Infinite Architectural Linear Lighting Solutions

MURO
RHEALS7236S

Silver Black White (ral9016)

Material:	AL6063-T5
Surface:	Anodized/ Painting
Cover:	Diffuser /Transparent /Opal
Power:	28 W/m
Lamp beads:	140LEDs/m (2835)
Lighting source width:	32 mm
Available lengths:	0.5-2.5M
Application:	Commercial lighting /Office lighting

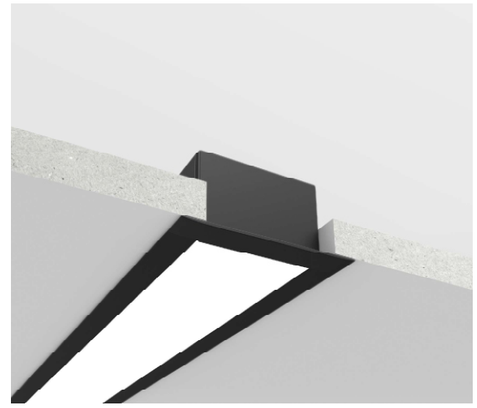

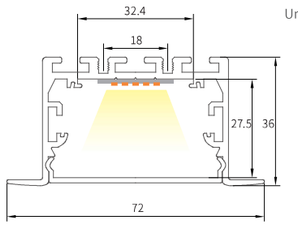

Unit: mm

Match with (0.6/1.2/1.8/2.4/3.0m) length of luminaire
NJG-V8280-32A

PCB-Constant voltage
Power: 28 W/m
Width: 32mm
length : 299mm/pcs

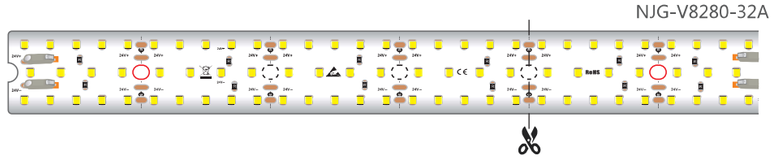

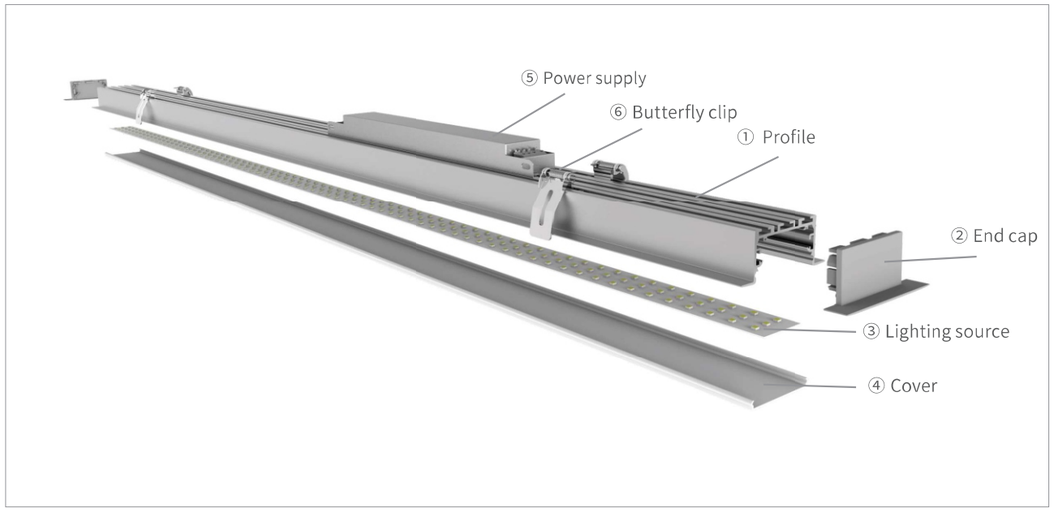

RHEA
LED LINEAR
Infinite Architectural Linear Lighting Solutions

HARO
RHEALS7270S

Silver Black White (ral9016)

Material:	AL6063-T5
Surface:	Anodized/ Painting
Cover:	Diffuser /Transparent /Opal
Power:	40W/m
Lamp beads:	240LEDs/m (2835)
Lighting source width:	32 mm
Available lengths:	0.5-3M
Application:	Commercial lighting /Office lighting

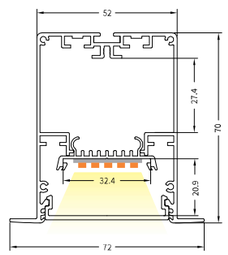

Unit: mm

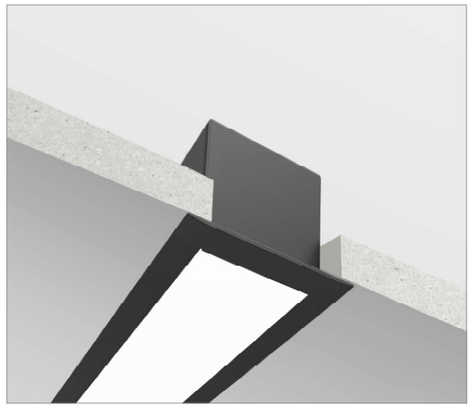

Match with（1.0/1.2/1.5/1.8/2.0/2.5/3.0m) length of luminair e
NJG-32X500X1 12C10B

PCB-Constant current
Power: 40 W/m
Width: 0.032m
length：0.49m/pcs

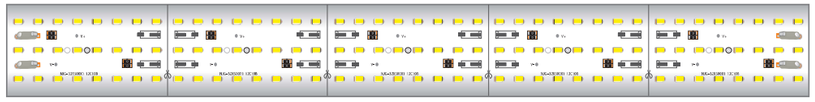

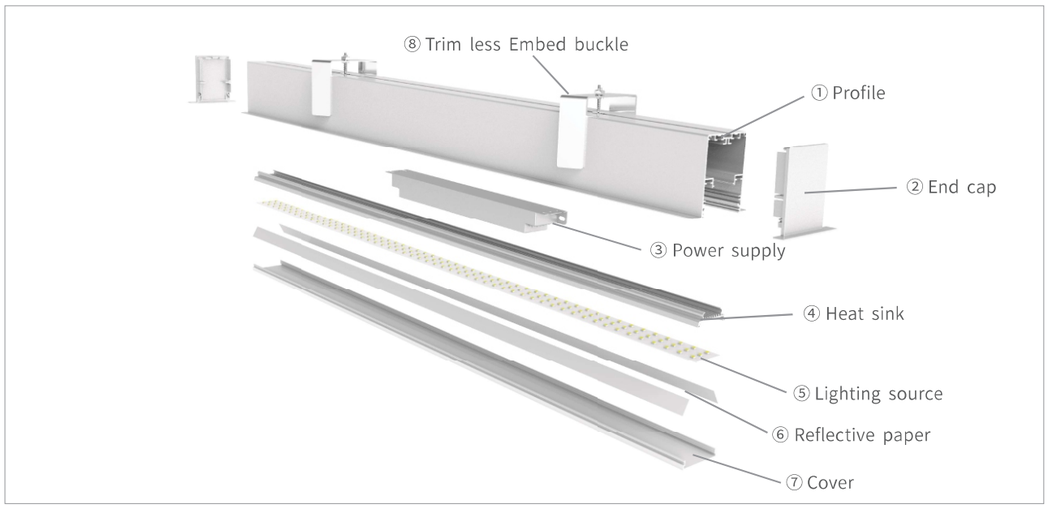

RHEA
LED LINEAR
Infinite Architectural Linear Lighting Solutions

HURO
RHEALS9627S

Silver Black White (ral9016)

Material:	AL6063-T5
Surface:	Anodized/ Painting
Cover:	Diffuser /Transparent /Opal
Power:	60 W/m
Lamp beads:	360LEDs/m (2835)
Lighting source width:	55 mm
Available lengths:	0.5-3M
Application:	Commercial lighting /Office lighting

Unit: mm

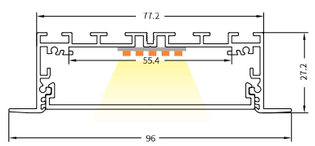

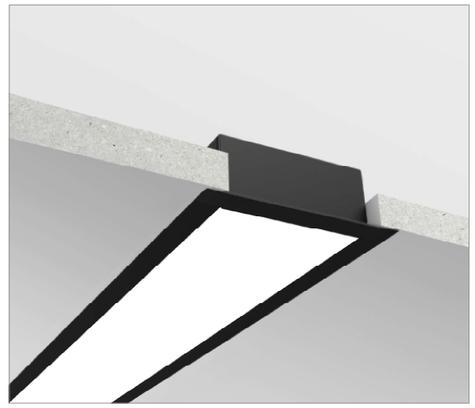

Match with（1.0/1.2/1.5/1.8/2.0/2.5/3.0m) length of luminair e
NJG-55X500 12C15B

PCB-Constant current
Power: 60 W/m
Width: 0.055m
length：0.49m/pcs

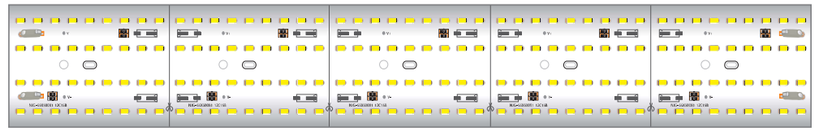

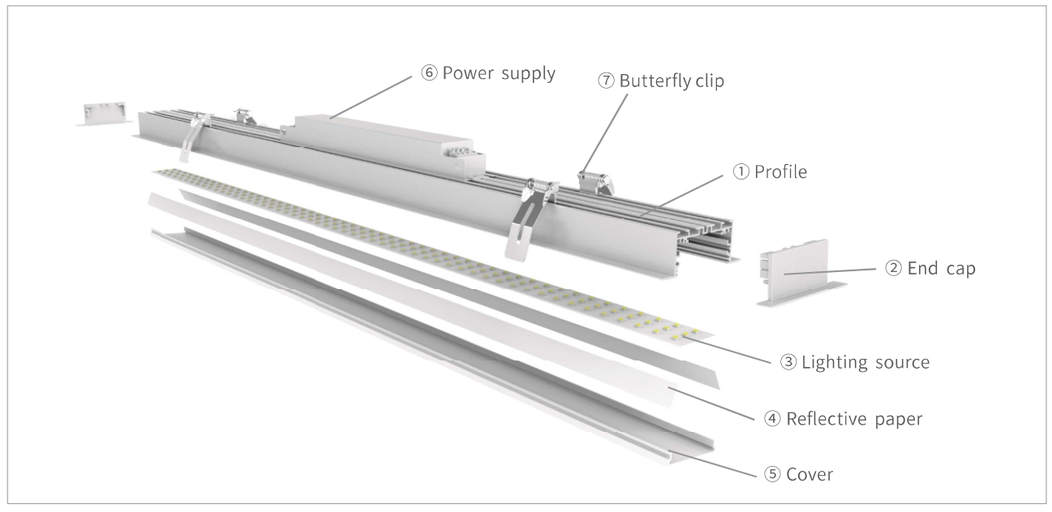

RHEA
LED LINEAR
Infinite Architectural Linear Lighting Solutions

KARO
RHEALS9636S

Silver Black White (ral9016)

Material:	AL6063-T5
Surface:	Anodized/ Painting
Cover:	Diffuser /Transparent /Opal
Power:	40 W/m
Lamp beads:	200LEDs/m (2835)
Lighting source width:	35 mm
Available lengths:	0.5-2.5M
Application:	Commercial lighting /Office lighting

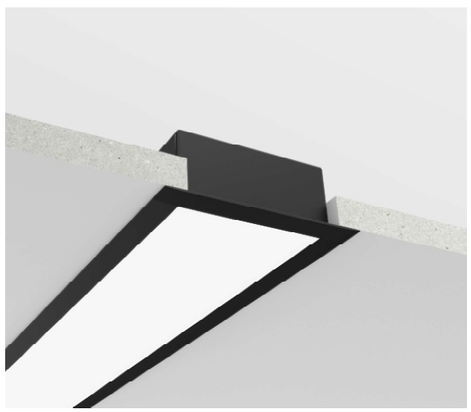

Unit: mm

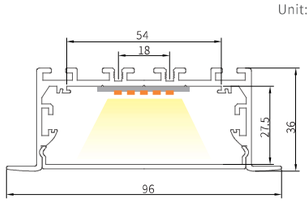

Match with (0.6/1.2/1.8/2.4/3.0m) length of luminaire
NJG-V8420-53A

PCB-Constant current
Power: 40 W/m
Width: 53mm
length : 299mm/pcs

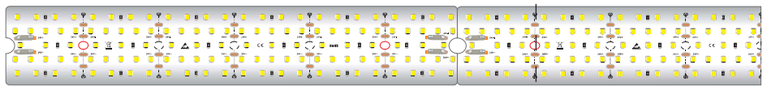

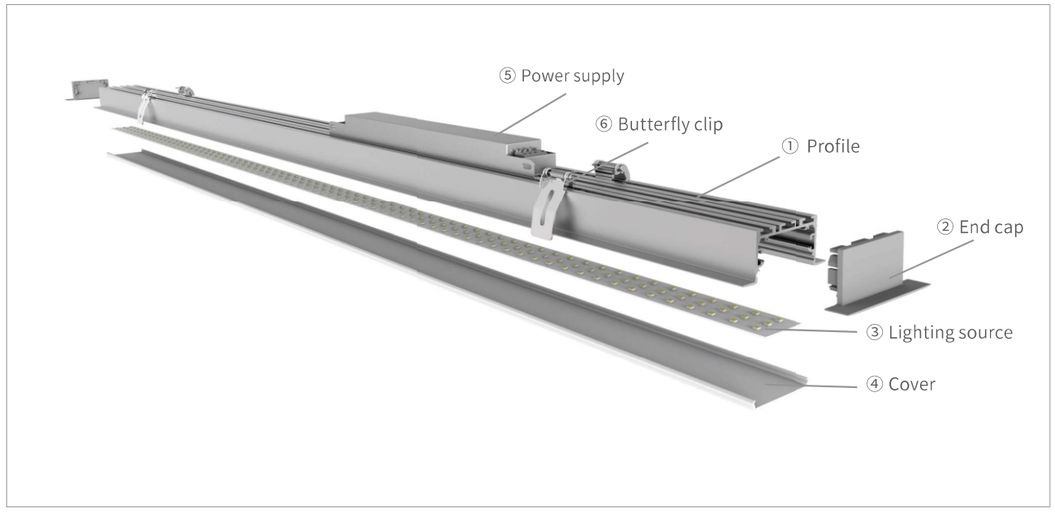

RHEA
LED LINEAR
Infinite Architectural Linear Lighting Solutions

CARO
RHEALS9778S

Silver Black White (ral9016)

Material:	AL6063-T5
Surface:	Anodized/ Painting
Cover:	Diffuser /Transparent /Opal
Power:	60 W/m
Lamp beads:	360LEDs/m (3014)
Lighting source width:	55 mm
Available lengths:	0.5-3M
Application:	Commercial lighting /Office lighting

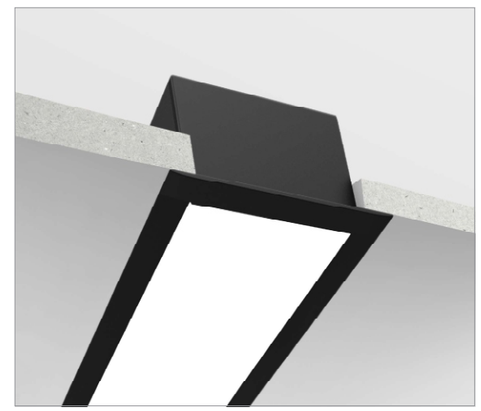

Unit: mm

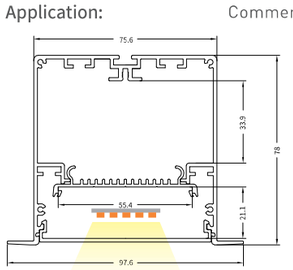

Match with（1.0/1.2/1.5/1.8/2.0/2.5/3.0m) length of luminaire
NJG-55X500 12C15B

PCB-Constant current
Power: 60 W/m
Width: 0.055m
length: 0.49m/pcs

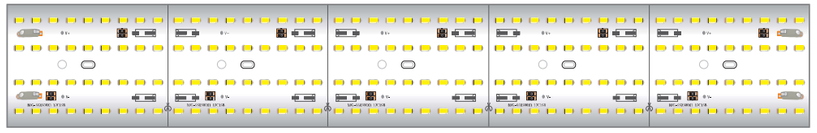

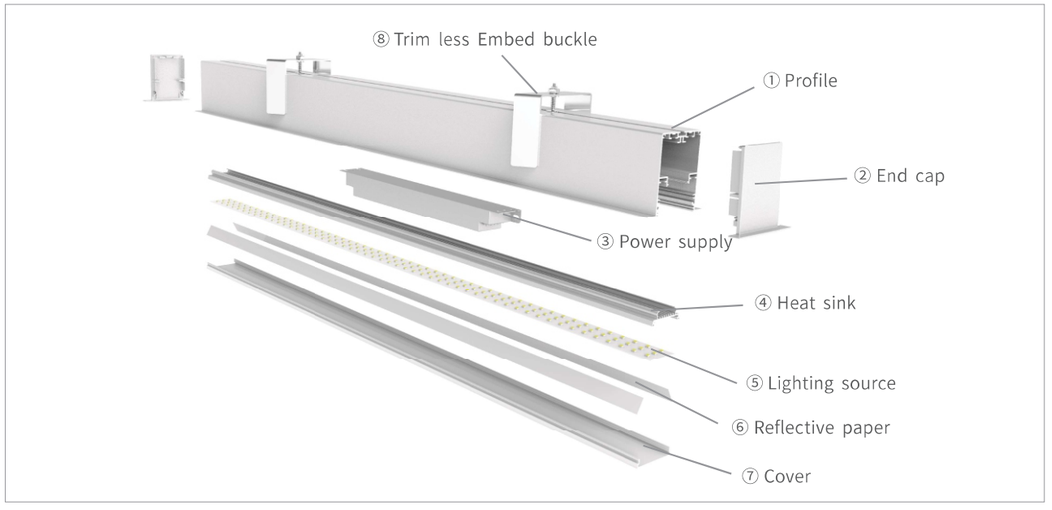

INSTALLATION METHODS

Pendant installation diagram

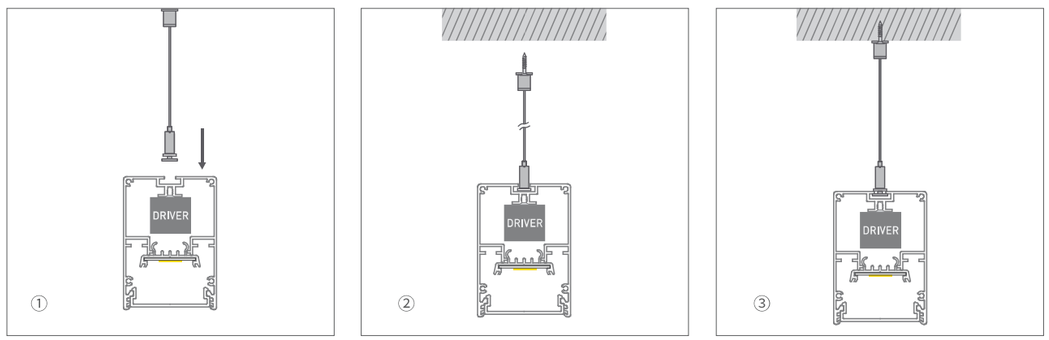

① Cord installed to profile

② Nail into the ceiling

③ Complete fixed

Recessed installation diagram

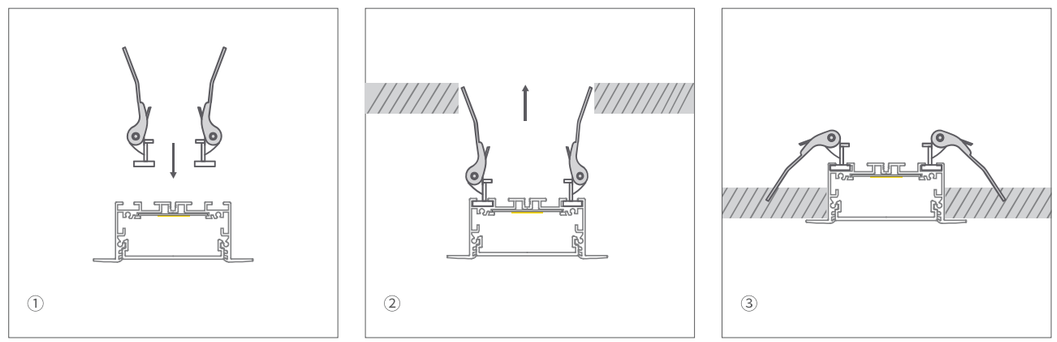

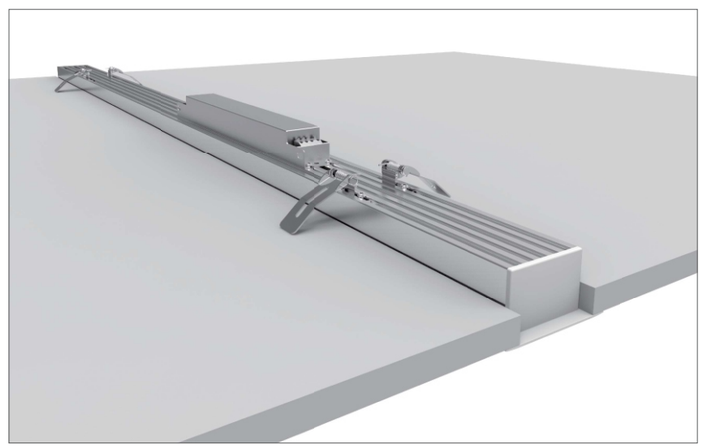

① Clip installed to profile

② Push into the slot

③ Complete fixed

www.rhealedlinear.com

INSTALLATION METHODS

Surface mounted diagram

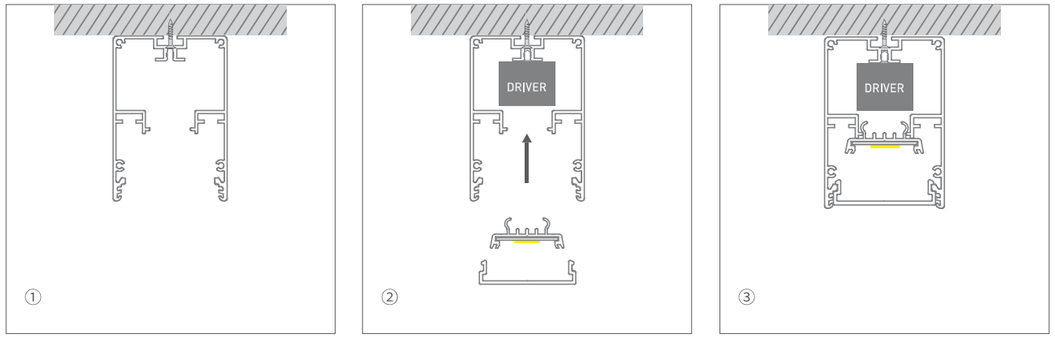

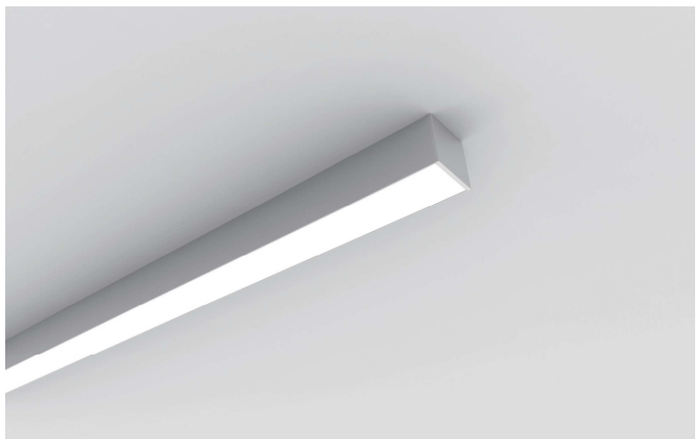

① Installation profile to the ceiling

② Installation of driver、light source、PC cover and end cap

③ Complete fixed

Wall mounted diagram

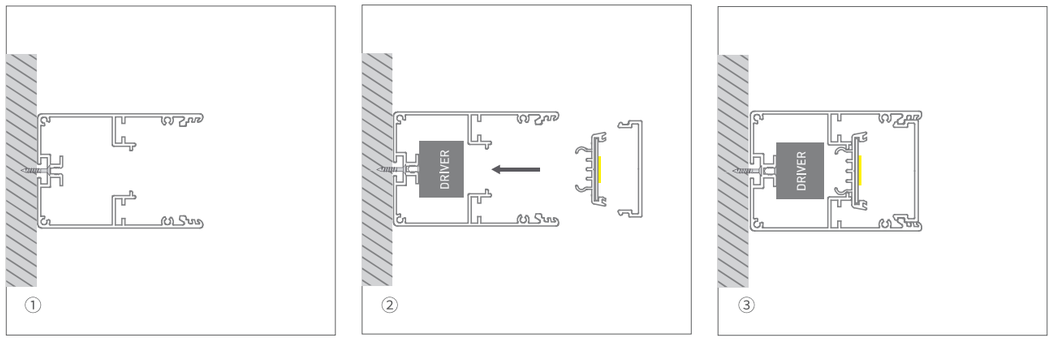

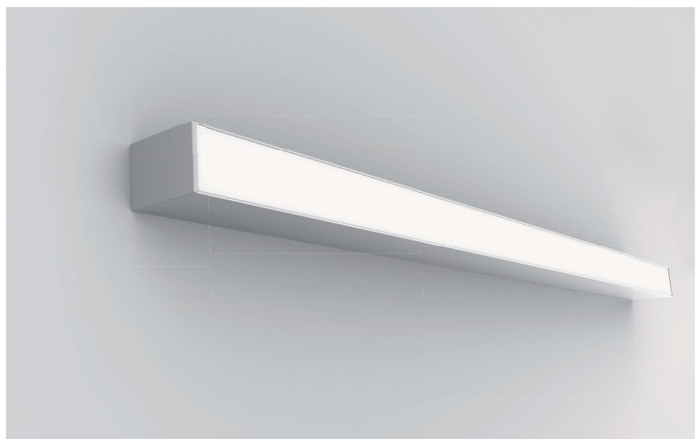

① Installation LED profile to wall

② Installation of driver、light source、PC cover and end cap

③ Complete fixed

www.rhealedlinear.com