RHEA
LED LINEAR
Infinite Architectural Linear Lighting Solutions

RHEALP002-RL

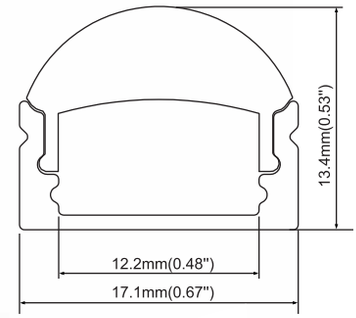

Types of installation:

Material: Extruded aluminum
Dimension: 17.1×13.4mm
Length: MAX 6m

CE IP20

END CAPS

End cap with hole
End cap without hole

FINISH

Anod. aluminum white Black

DIFFUSERS

PMMA opal matte
PMMA semi-clear
PMMA clear
60 degrees

PC diffused

ACCESSORIES

Mounting clip (metal)

Mounting clip (PC)

180° Connector