RHEA
LED LINEAR
Infinite Architectural Linear Lighting Solutions

Types of installation:

Material: Extruded aluminum
Dimension: 23.4×28mm
Length: MAX 6m

RHEALP032

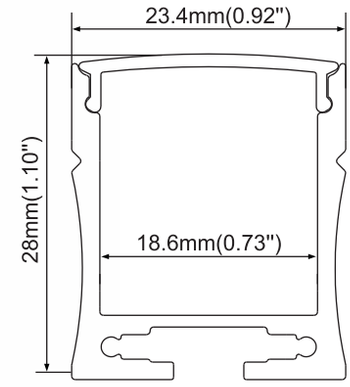

CE IP20

FINISH

Anod. aluminum white Black

END CAPS

End cap with hole
End cap without hole

DIFFUSERS

PMMA opal matte
PMMA semi-clear
PMMA clear
PC diffused

Black PC

ACCESSORIES

Steel wire

Mounting clip (metal)